Hybrid Inverter

ESS-TH6K@A-EU

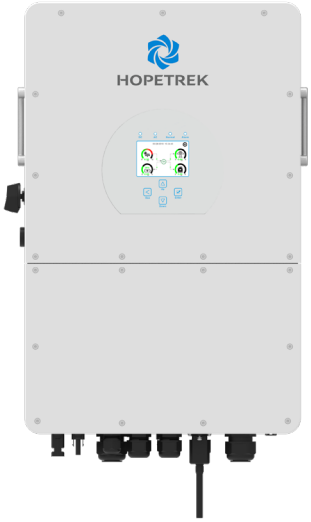

Overview

ESS-TH6K@A-EU is a multifunctional hybrid inverter, combining functions of inverter, solar charger and battery charger to offer uninterruptible power support with portable size. Its comprehensive LCD display offers user configurable and easy accessible button operation such as battery charging, AC/solar charging, and acceptable input voltage based on different applications.

Features

- 230V/400V three phase pure sine wave, 100% unbalanced output, each phase; Max. output up to 50% rated power.
- High voltage battery, higher efficiency.
- DC couple and AC couple to retrofit existing solar system.
- Max. 10 pcs parallel for on-grid and off-grid operation.
- Support 6 time periods for battery charging/discharging.
- Smart battery charger design for optimized battery performance.
- Self-consumption and feed-in to the grid.
- Auto restart while AC is recovering.
- Programmable supply priority for battery or grid.
- Programmable multiple operation modes: on grid, off grid and UPS.
- Configurable battery charging current/voltage based on applications by LCD setting.

- Configurable AC/Solar/Generator Charger priority by LCD setting.
- Compatible with mains voltage or generator power.
- Support overload/over temperature/short circuit protection.
- With limit function, prevent excess power overflow to the grid.
- Support connecting APP via WIFI to achieve remote monitoring.

Specifications

ESS-TH6K@A-EU	
PV Input Parameters	**Description**
Max Input Power	7800W
Max Input Voltage	1000V
Rated Input Voltage	600V
Start-up Voltage	180V
MPPT Voltage Range	150~850V
Full Load MPPT Voltage Range	195~850V
Max Input Current	20A+20A
Max Short-circuit Current	30A+30A
Number of MPP Trackers	2
Number of Strings Per MPP Tracker	1+1
Battery Parameters	**Description**
Battery Type	Li-Ion
Battery Voltage Range	160~700V
Max Charging Current	30A
Max Discharging Current	30A
Number of Battery Input	1
On-grid Output Parameters	**Description**
Rated Output Power	6000W
Max Output Power	6600W
Grid Type	Three Phase
Rated Output Voltage	3L/N/PE 220/380, 230/400Vac
Rated Output Frequency	50/60Hz
Rated Output Current	9.1/8.7A
Max Output Current	10/9.6A
Max Continuous Passthrough	40A
Power Factor	0.8 leading to 0.8 lagging

Total Harmonic Distortion (THD)	＜3%
DC Current Injection	<0.5% In
Off-grid Output Parameters	**Description**
Rated Output Power	6000W
Max Output Power	6600W
Peak Power	9000W,10S
Grid Type	Three Phase
Rated Output Voltage	3L/N/PE 220/380, 230/400Vac
Rated Output Frequency	50/60Hz
Rated Output Current	9.1/8.7A
Max Output Current	10/9.6A
Max Three-phase Unbalanced Output Current	13A
Power Factor	0.8 leading to 0.8 lagging
Total Harmonic Distortion (THD)	＜3%
DC Current Injection	<0.5% In
Protection	**Description**
Anti-islanding Protection	YES
PV Reverse Polarity Protection	YES
Insulation Resistor Detection	YES
Residual Current Monitoring Unit	YES
Output Over Current Protection	YES
Output Shorted Protection	YES
Surge Protection	DC Type II / AC Type II
Over Voltage Category	DC Type II / AC Type III
General	**Description**
Max Efficiency	97.60%
Euro Efficiency	97.00%
MPPT Efficiency	>99%
Display	LCD indicator, APP
BMS Communication	CAN
Wireless Communication	WiFi
Basic Parameters	**Description**
Dimensions	408(W)*237(D)*638(H)mm (Excluding connectors and brackets)
Weight	30.5kg
Cooling	Free cooling
Noise	≤55 dB
Grid Regulation	EN 50549, OVE-Richtlinie R25, VDE-AR-N 4105, NA/EEA-NE7-CH, PPDS

EMC/Safety Regulation	IEC/EN 62109-1,IEC/EN 62109-2,IEC/EN 61000-6-1, IEC/EN 61000-6-2,IEC/EN 61000-6-3,IEC/EN 61000-6-4
Ingress Protection	IP65
Installation Style	Wall-mounted
Operating Environment	**Description**
Operating Temperature	-40~60℃, >45℃ Derating
Operating Humidity	≤95%，RH
Altitude	≤2000m

Ordering Information

Model	Qty	Remarks
ESS-TH6K@A-EU	1	Hybrid inverter (three phase, high voltage, on&off-grid, 6kW AC output, EU)

Dimensions

Dimensions: 408(W)*237(D)*638(H) mm

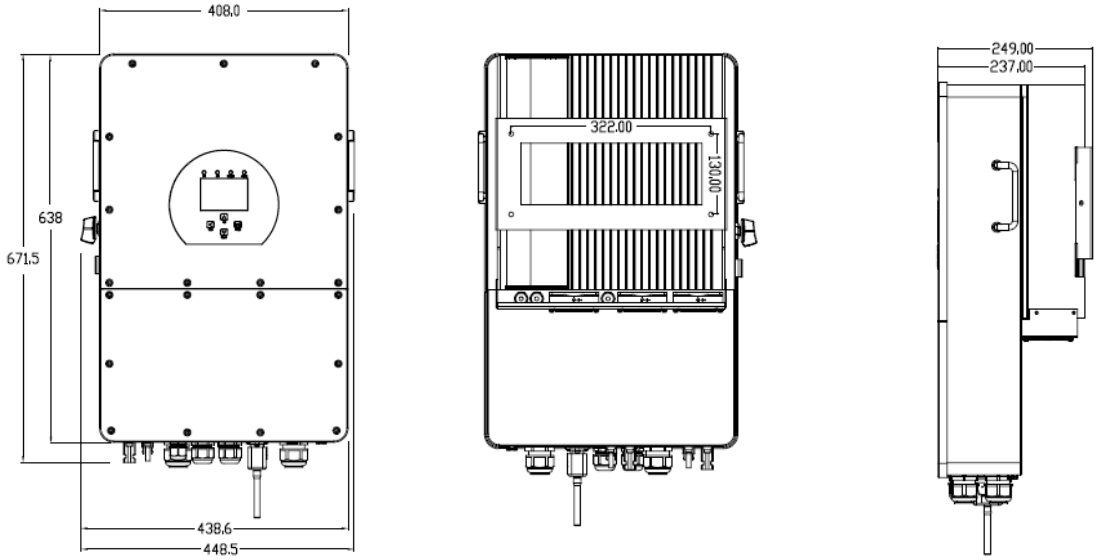

HopeTrek Innovations Co.,Ltd.

Room 57, 3/F, Block A, East Sun Industrial Centre, 16 Shing Yip Street, Kwun Tong, Kowloon, Hong Kong

Email: info@hopetrek.com

www.hopetrek.com

©2023 HopeTrek Innovations Co.,Ltd. All rights reserved.

Product specifications and availability are subject to change without notice.