Hybrid Inverter

SUN-TH-HP8K-A1

Overview

SUN-TH-HP8K-A1 is a versatile hybrid inverter that integrates the functions of a bidirectional inverter, solar charger, and battery charger, offering portable uninterruptible power supply support. It supports smart system control, various working modes, and autonomous energy management.

Features

- Supports high-voltage battery systems for higher efficiency.
- Supports 160% PV oversizing.
- Supports 110% AC overloading output.
- 100% unbalanced output,each phase.
- Supports 200% backup power output for 60 seconds.
- Supports 200% AC input.
- Battery charge/discharge current up to 30A.

- 10ms EPS switch time.
- Supports smart load management.
- Supports parallel operation with up to 5 inverters (to be launched in 2026).
- Compatible with grid voltage or diesel generator power supply (to be launched in 2026).
- Supports overload protection, overtemperature protection, and short-circuit protection.
- Allows to zero feed-in, meeting regulation requirements of different regions.
- Supports remote monitoring on an app via Wi-Fi connection.
- IP66 protection, allows for outdoor use.
- Supports three-phase unbalanced output current.

Specifications

SUN-TH-HP5K-A1	
PV String Input Data	**Description**
Max. PV Input Power	12800W
Max. PV Input Voltage	1000V
Rated PV Input Voltage	600V
Start-up Voltage	150V
MPPT Voltage Range	130~950V
Full Load MPPT Voltage Range	400~850V
Max. PV Input Current	16/16A
Max. DC Short Circuit Current	20/20A
No.of MPPT Trackers	2
No.of Strings Per MPPT	1/1
Battery Input Data	**Description**
Battery Type	Li-ion
Battery Voltage Range	130~800V
Max. Charging Current	30A
Max. Discharging Current	30A
No.of Battery Input	1
AC input/output data(On-grid)	**Description**
Rated AC Output Power	8000W
Max. AC Output Apparent Power	8800VA
Grid Type	Three Phase
Rated AC Voltage	220 V / 380 V; 230 V / 400 V, 3L / N / PE,

Rated AC Frequency	50/60Hz
Rated AC Output Current	12.1A
Max. AC Output Current	13.3A
Max. Three-phase Unbalanced Output Current	18A
Power Factor	0.8 leading to 0.8 lagging
THDi (@Rated Power)	＜3%
Max. AC Power From Grid	16000VA
Max. Current From Grid	24.2A
AC Output Data（Back-up）	**Description**
Rated Output Power	8000W
Max. Output Apparent Power	8800VA
Peak Output Apparent Power	16000W@60s
Rated Output Voltage	220 V / 380 V; 230 V / 400 V, 3L / N / PE,
Rated Output Frequency	50/60Hz
Rated Output Current	12.1A
Max Output Current	13.3A
Switch Time	＜10ms
THDv (@Linear Load)	＜3%
Protection	**Description**
Anti-islanding Protection	Integrated
PV Input Reverse Polarity Protection	Integrated
Insulation Resistor Detection	Integrated
Ground Fault Monitoring	Integrated
Residual Current Monitoring (GFCI)	Integrated
AC Overcurrent Protection	Integrated
AC Short Circuit Protection	Integrated
AC Overvoltage Protection	Integrated
DC Switch (Solar)	Integrated
AFCI	Optional
Remote Shutdown	Integrated
Thermal Protection	Integrated
Battery input reverse polarity protection	Integrated
DC Surge Protection	II
AC Surge Protection	II
Working Efficiency	**Description**
Max. Efficiency	98.2%
Euro Efficiency	97.7%
MPPT Efficiency	>99%

General Data	Description
User Interface	LED & APP
Communication With BMS	CAN
Communication With Portal	WiFi+LAN/4G(Optional)
Dimension(W×D×H mm)	497*214*511mm
Weight	32kg
Self-consumption At Night	＜10W
Certifications and Standards	**Description**
Grid Connection Standard	EN 50549-1&-10, VDE-AR-N 4105, IEC 61727, IEC 62116, CEI 0-21, PPDS2022
Safety Standard	IEC62109-1&2
EMC Standard	EN61000-6-1, EN61000-6-2, EN61000-6-3, EN61000-6-4, EN301 489-1/-17
Operating Conditions	**Description**
Operating Temperature Range	-30~60℃
Storage Temperature Range	-30~85℃
Operation Relative Humidity	≤95%, RH
Max. Operation Altitude	4000m(>2000m power derating)
Ingress Protection	IP66
Cooling Concept	Natural Cooling
Installation Style	Wall-mounted
Noise Emission	＜30dB
Warranty	10 Years

Ordering Information

Model	Qty	Remarks
SUN-TH-HP8K-A1	1	Hybrid inverter (three-phase, high voltage, on-grid/off-grid, 8kW AC output, EU)

Dimensions

Dimensions: 497(W)*214(D)*511(H) mm

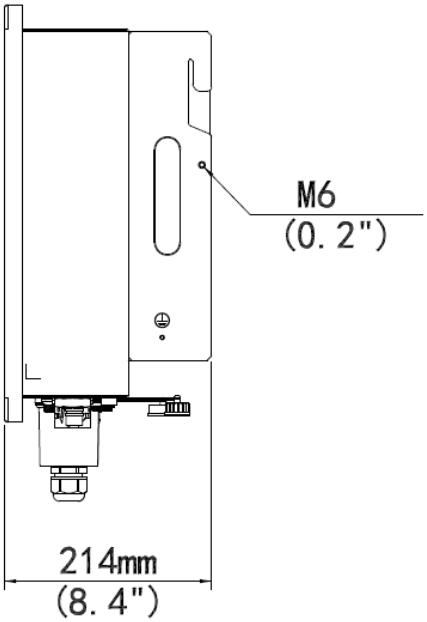

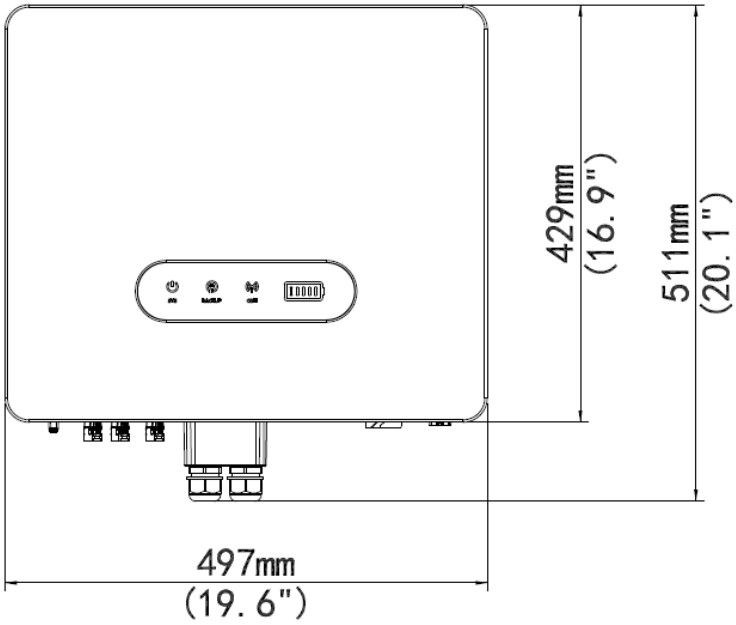

HopeTrek Innovations Co., Ltd.

Room 57, 3/F, Block A, East Sun Industrial Centre, 16 Shing Yip Street, Kwun Tong, Kowloon, Hong Kong

Email: info@hopetrek.com.

www.hopetrek.com

Product specifications and availability are subject to change without notice.